IGLAND

IGLAND 42 S

Parts Catalogue

RESERVEDELSLISTE - SPARE PARTS LIST

IGLAND 42 S

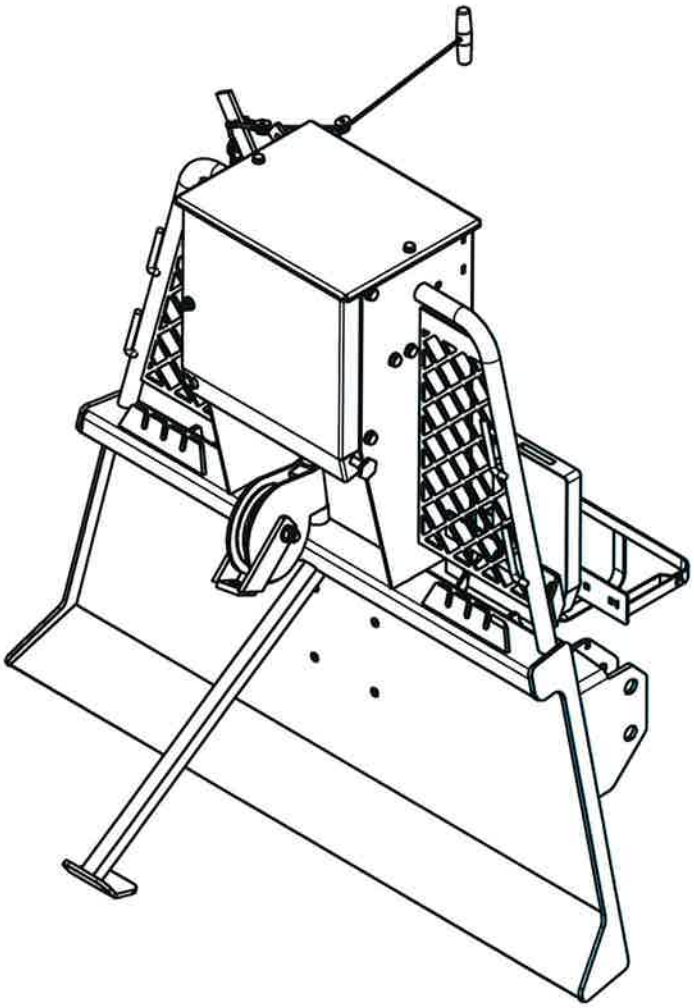

© Nosted & AS
- Gjengivelse av tekst og tegninger uten tillatelse forbudt.
- Reproduction of text or illustrations without permission is prohibited.
- Eine wiedergabe von Texten und Zeichnungen ohne unsere Genehmigung ist nicht gestattet.
- Interdiction de taute reproduction de texts ou d'illustations sans autorisation prèalable

Nøsted & AS
Avd. Grimstad
Industriveien 30
4879 Grimstad, Norway
Phone + 47 37 25 62 00
Fax + 47 37 25 62 01
Mail: corporate@igland-as.com
http://www.igland-as.com

Approved:	Revised:	
	Issued: 27.02.2019	
	P/N 390014	

IGLAND

RESERVEDELSLISTE – SPARE PARTS LIST				
Pos.	Qty	Item No./ Varenummer	Beskrivelse	Description
1	1	143220	Chassis, kpl.	Chassis, cpl.
2	1	143080	Toppdeksel	Top cover
3	2	012802	Skrue	Hex-Head Bolt
4	5	012235	Skive	Washer
5	1	143222	Støttebein	Parking leg
6	1	021006	Orepinne	Locking pin
7	1	143224	PTO deksel, stål	Cover, steel
8	1	121632	PTO deksel, plast	Cover, plastic
9	2	012800	Skrue	Hex-Head Bolt
10	3	012760	Skrue	Hex-Head Bolt
11	3	012194	Skive	Washer
12	3	012198	Mutter	Hex Nut
13	1	143127	Parkeringsbøyle for PTO	Parking hook for PTO
14	2	020815	Spennhylse	Locking pin
15	2	021320	Trekkstagbolt kat 1-2	Bolt
16	3	021004	Orepinne	Locking pin
17	1	020177	Toppstagbolt kat 2	Top link bolt cat 2
18	1	020099	Toppstagbolt kat 1 (Tilleggsutstyr)	Top link bolt cat 1 (Option)

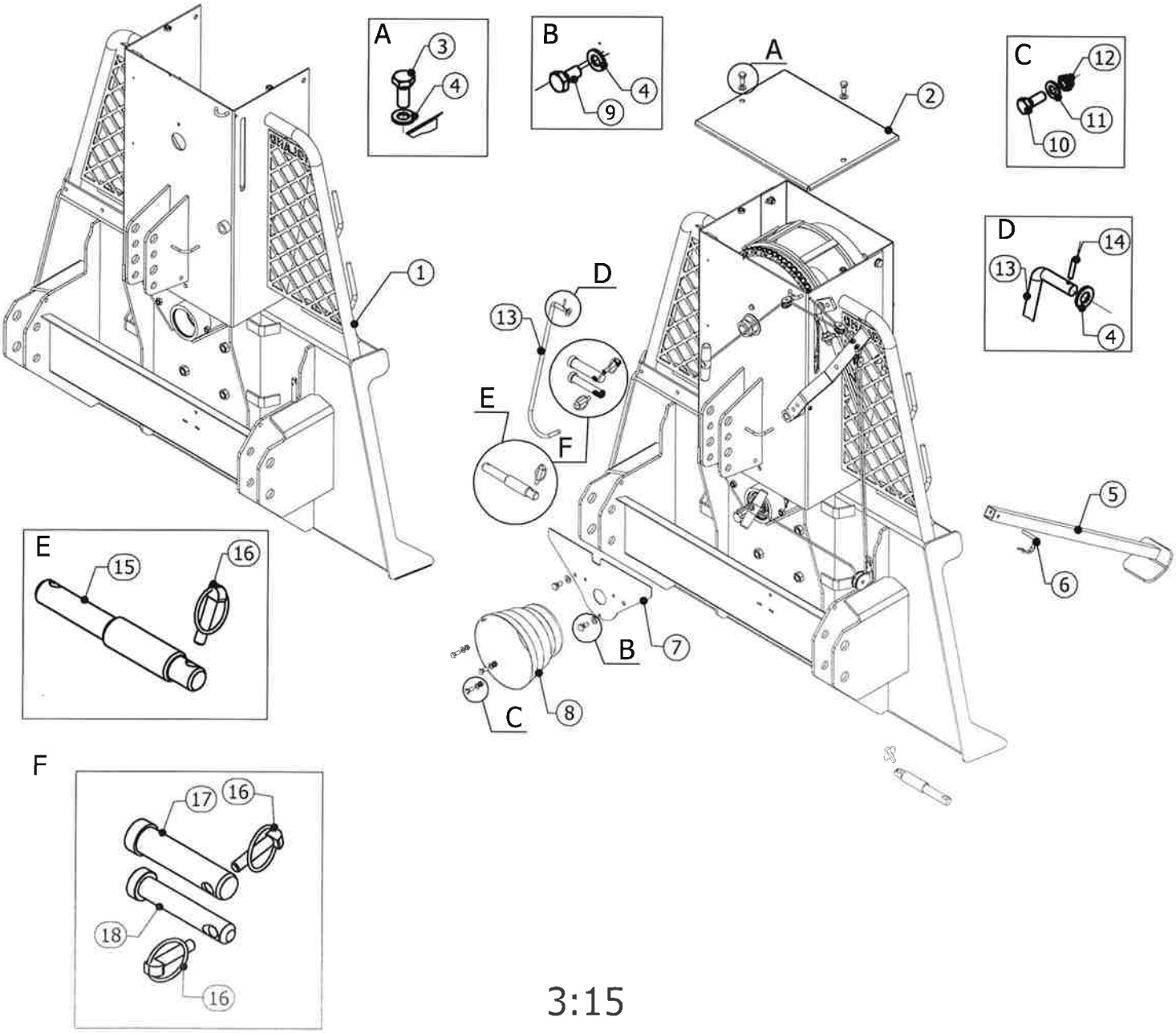

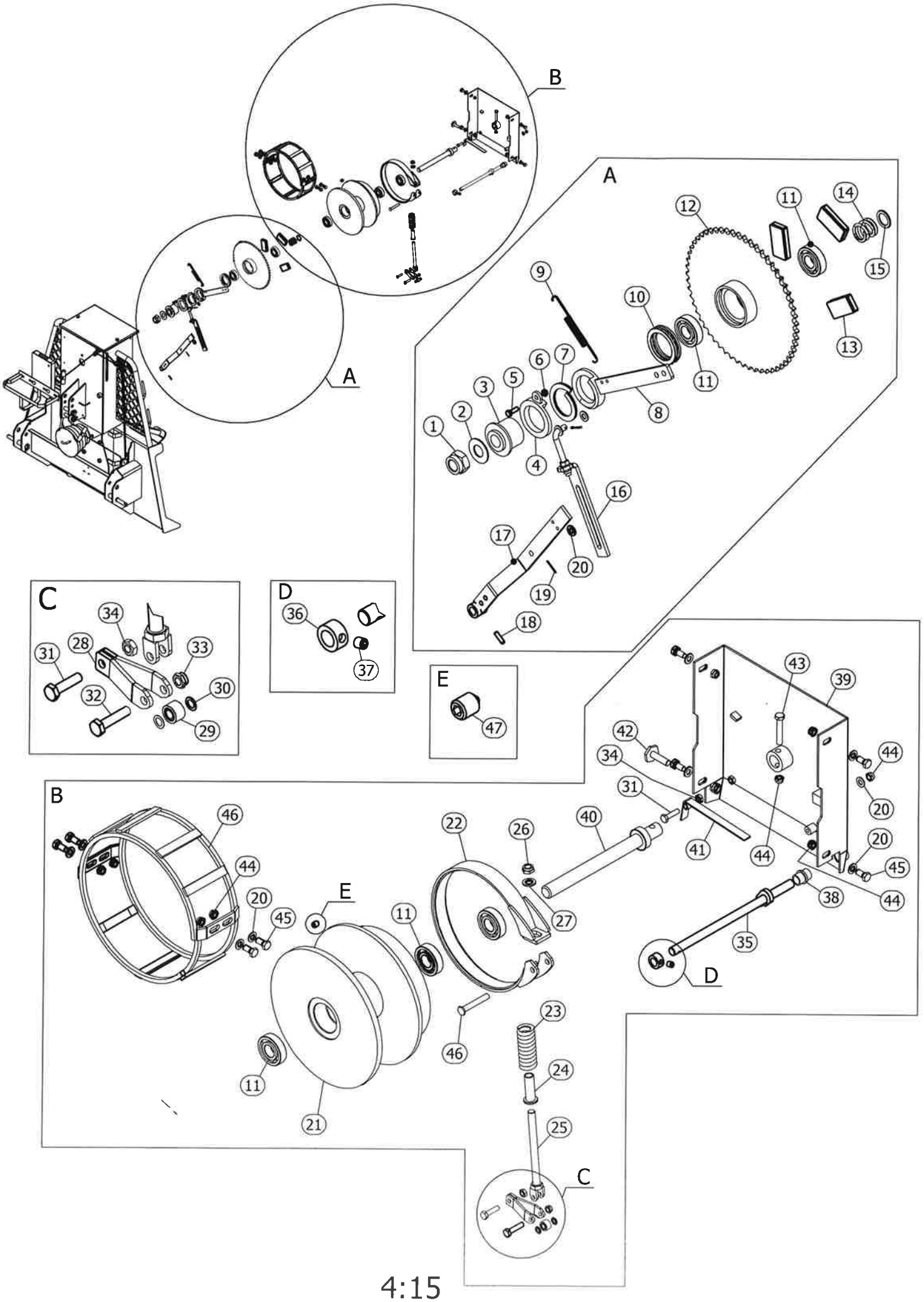
A
B
C
D
E
1
2
3
4
5
6
7
8
9
10
11
12
13
14
15
16
17
18
19
20
21
22
23
24
25
26
27
28
29
30
31
32
33
34
35
36
37
38
39
40
41
42
43
44
45
46
47

4:15

RESERVEDELSLISTE – SPARE PARTS LIST				
Pos.	Qty	Item No./ Varenummer	Beskrivelse	Description
1	1	012590	Mutter	Hex Nut
2	1	122030	Skive	Washer
3	1	122028	Hylse	Sleeve
4	1	122026	Ekspansjonsring	Expansion ring
5	1	012762	Skrue	Hex-Head Bolt
6	1	012198	Mutter	Hex Nut
7	1	026363	Lager, splittet	Bearing, special cut
8	1	143077	Ekspansjonsring m/spak	Lever w/expansion ring
9	1	027250	Fjær	Spring
10	1	026350	Lager, kule aksial	Bearing, axial
11	5	026062	Lager, kule	Bearing
12	1	143013	Kjedehjul 3/4"	Chain Wheel 3/4"
13	3	145094	Clutchlamellkloss, sett av 3 stk	Clutch set (3 pads)
14	1	122020	Fjær, trykk	Spring
15	1	031205	Shims	Shims
16	1	143097	Mellomarm, justerbar, kpl.	Arm adjustable, cpl.
17	1	143099	Spak	Lever
18	1	020825	Spennhylse	Locking pin
19	2	021045	Saksesplint	Split Pin
20	9	012274	Skive	Washer
21	1	143196	Trommel	Drum
22	1	143071	Bremseband	Brake band
23	1	027295	Fjær	Spring
24	1	156135	Hylse til bremsebolt	Sleeve
25	1	143310	Bremsebolt	Brake bolt
26	1	012350	Mutter	Hex Nut
27	1	012354	Skive	Washer
28	1	143311	Gaffel	Fork
29	1	025603	Lager	Bearing
30	2	030403	Shims	Shims
31	2	012205	Skrue	Hex-Head Bolt
32	1	012209	Skrue	Hex-Head Bolt
33	1	012231	Mutter	Hex Nut
34	2	012237	Mutter	Hex Nut
35	1	143312	Eksenteraksel	Cam shaft
36	1	143081	Hylse	Sleeve
37	1	015566	Umbrako skrue	Screw
38	1	143313	Nylon foring	Plastic sleeve
39	1	143314	Bakplate	Back plate
40	1	143112	Hovedaksel	Main axel
41	1	143114	Subbebrems	Anti backlash brake
42	1	143116	Justeringsskrue for subbebrems	Adjustment screw
43	1	017167	Skrue	Hex-Head Bolt
44	9	012270	Mutter	Hex Nut
45	8	012842	Skrue	Hex-Head Bolt
46	1	143030	Trommelgrind	Drum protection
47	1	015566	Sett skrue	Set screw

RESERVEDELSLISTE - SPARE PARTS LIST - ERSATZTEILLISTE					
Pos	Art.No.	No	Beskrivelse	Description	Bezeichnung
1	070375	1	Kjede, kpl.	Chain, cpl.	
2	070368	1	Halvledd	Chain 1/2 link	
3	070369	1	Kjedelås	Chain locking	
4	070318	1	Kjedehjul	Chain wheel	
5	122034	1	Hylse	Sleeve	
6	026063	2	Lager	Bearing	
7	031325	-	Shims	Shims	
8	031324	-	Shims	Shims	
9	026719	1	Seegering	Circlip	
10	026909	1	Seegering	Circlip	
11	143232	1	Kjedestrammer	Chain tensioner	
12	012270	1	Mutter	Hex Nut	
13	027250	1	Fjær	Spring	

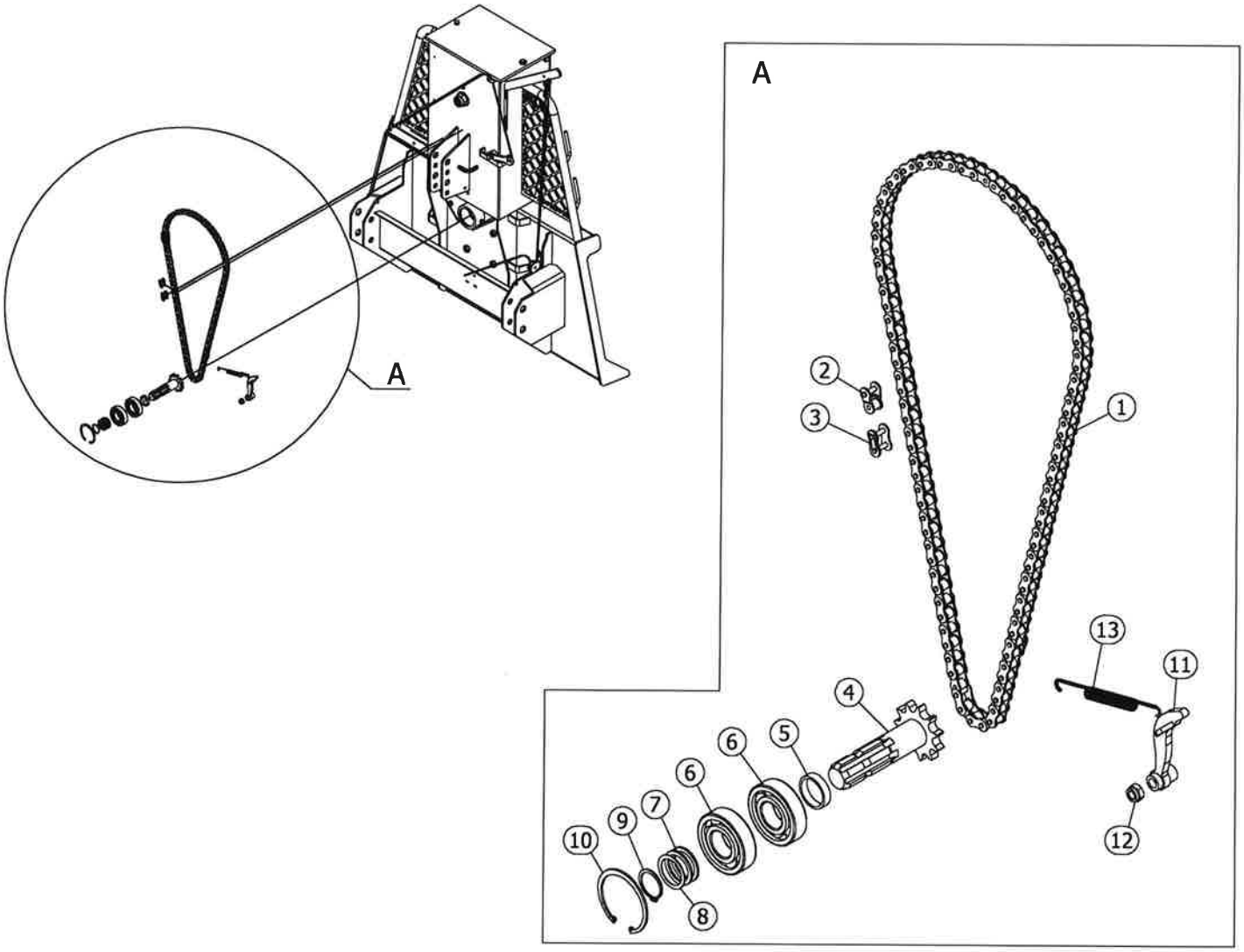

RESERVEDELSLISTE - SPARE PARTS LIST - ERSATZTEILLISTE					
Pos	Art.No.	No	Beskrivelse	Description	Bezeichnung
1	143130	1	Inntrekksblokk, kpl.	Haul in block	
2	122051	1	Aksel m/skrue og mutter, kpl.	Axel w/bolt and nut, cpl.	
3	012335	1	Skrue	Hex-Head Bolt	
4	012354	2	Skive	Washer	
5	158367	2	Hylse	Sleeve	
6	158366	1	Hylse	Sleeve	
7	158365	1	Ring	Ring	
8	158364	1	Trinse	Pulley	
9	026036	1	Lager	Bearing	
10	026920	1	Seegering	Circlip	
11	012350	1	Mutter	Hex Nut	
12	158368	1	Wirestyr, kpl.	Wire guide, cpl.	
13	143121	1	Snorbetjening med trinser etc. kpl.	Operation cord, cpl.	

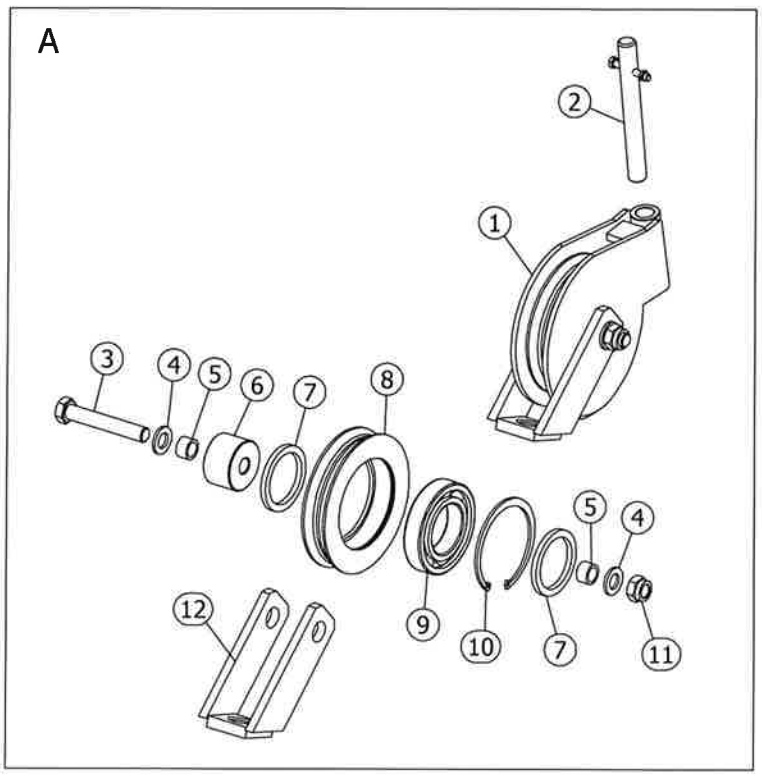

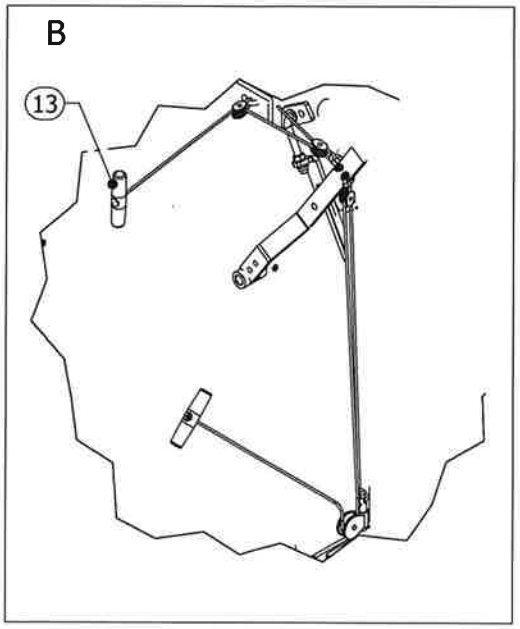

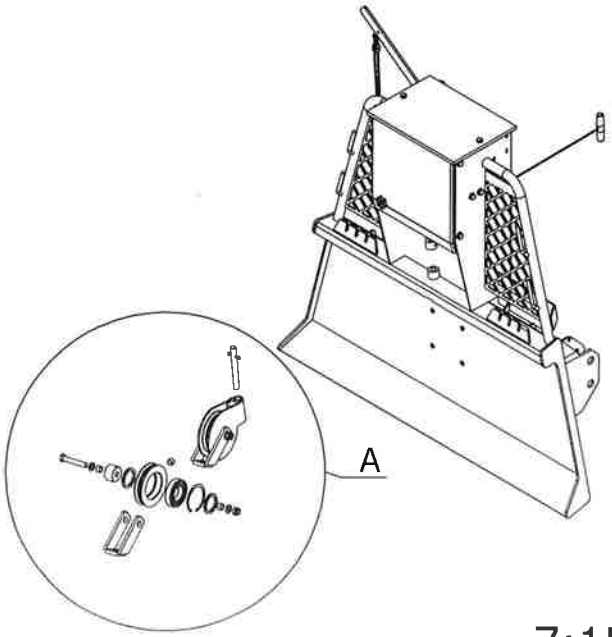

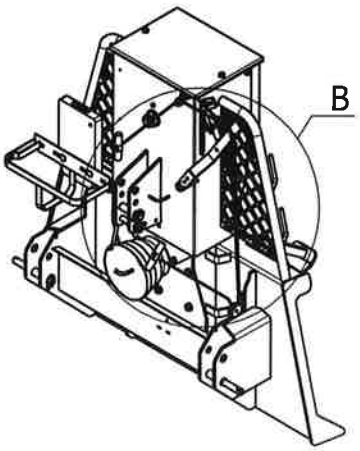

7:15

TILLEGGSUTSTYR - OPTION - ZUBEHÖR

RESERVEDELSLISTE - SPARE PARTS LIST - ERSATZTEILLISTE					
Pos	Art.No.	No	Beskrivelse	Description	Bezeichnung
1	143210	1	Triangelkobling	Triangle coupler	
2	143170	1	HMV kobling kpl.	HMV Coupler, cpl.	
3	143174	1	HMV ramme	HMV frame	
4	143172	2	Mellomstykke	Distance part	
5	143171	4	Skive	Washer	
6	012460	2	Skrue	Hex-Head Bolt	
7	012470	2	Mutter	Hex Nut	
8	143173	2	Hylse	Sleeve	
9	143160	1	Toppblokk, kpl.	Top block, cpl.	
10	122111	1	Blokkhus	Block housing	
11	012339	1	Skrue	Hex-Head Bolt	
12	012350	1	Mutter	Hex Nut	
13	012250	1	Skrue	Hex-Head Bolt	
14	012270	1	Mutter	Hex Nut	
15	012274	1	Skive	Washer	
16	021008	1	Orepinne	Locking pin	
17	122113	2	Utforingsskive	Distance washer	
18	122112	1	Opplagringshylse	Sleeve	
19	026900	2	Seegering	Circlip	
20	026062	1	Lager	Bearing	
21	34391016	1	Trinsehjul	Pulley wheel	
22	122110	1	Blokk, kpl	Block, cpl.	
23	012844	4	Skrue	Hex-Head Bolt	

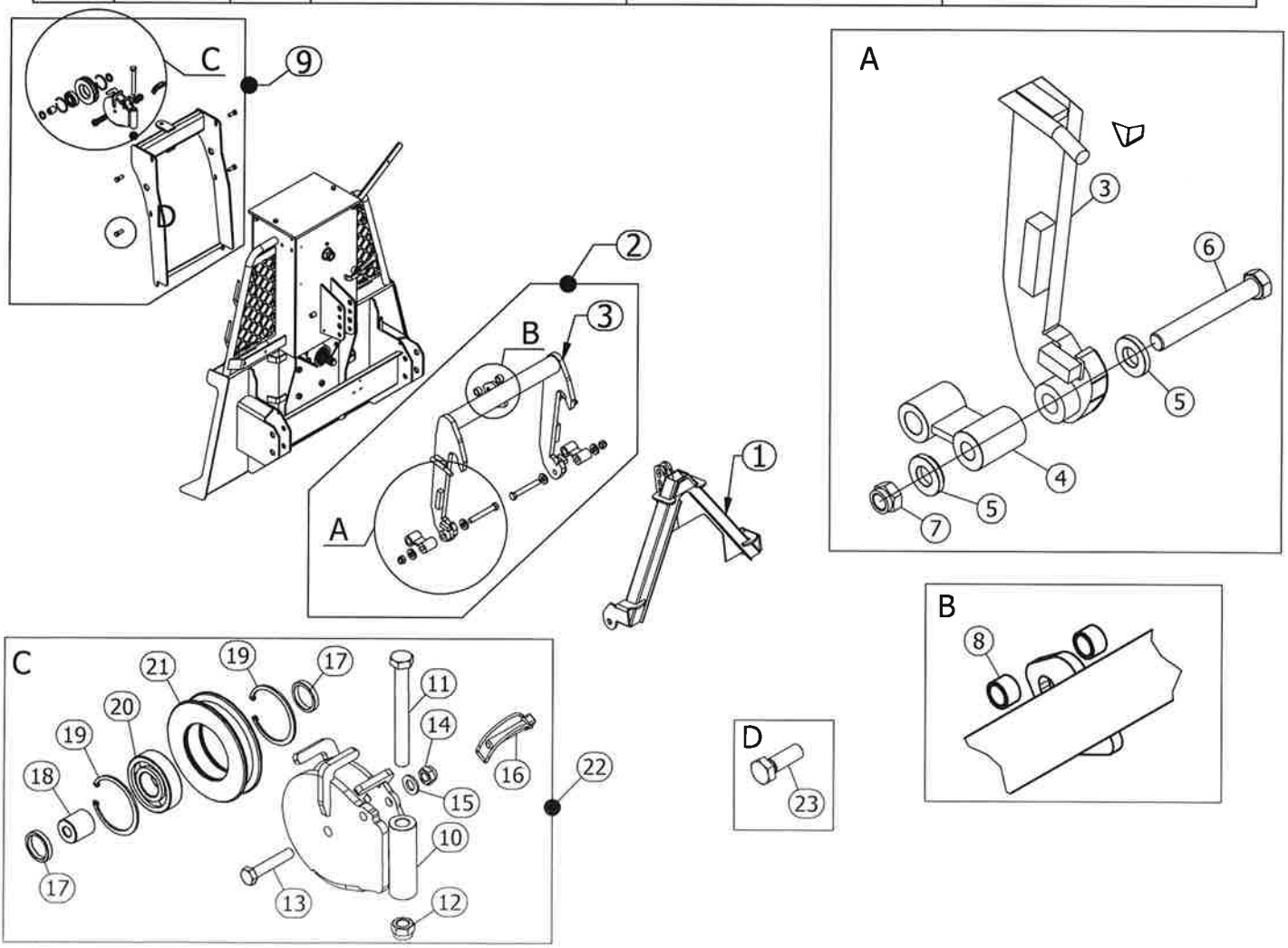

TILLEGGSUTSTYR - OPTION - ZUBEHÖR

RESERVEDELSLISTE - SPARE PARTS LIST - ERSATZTEILLISTE					
Pos	Art.No.	No	Beskrivelse	Description	Bezeichnung
1	159337	1	Toppgitter	Protection for screen	
2	022151	1	Motorsagholder	Chain saw holder	
3	022150	1	Combikanne holder	Fuel Can Holder	
4	016067	2	Plogbolter	Cup Head Square Neck Bolt	
5	012231	2	Mutter	Hex Nut	

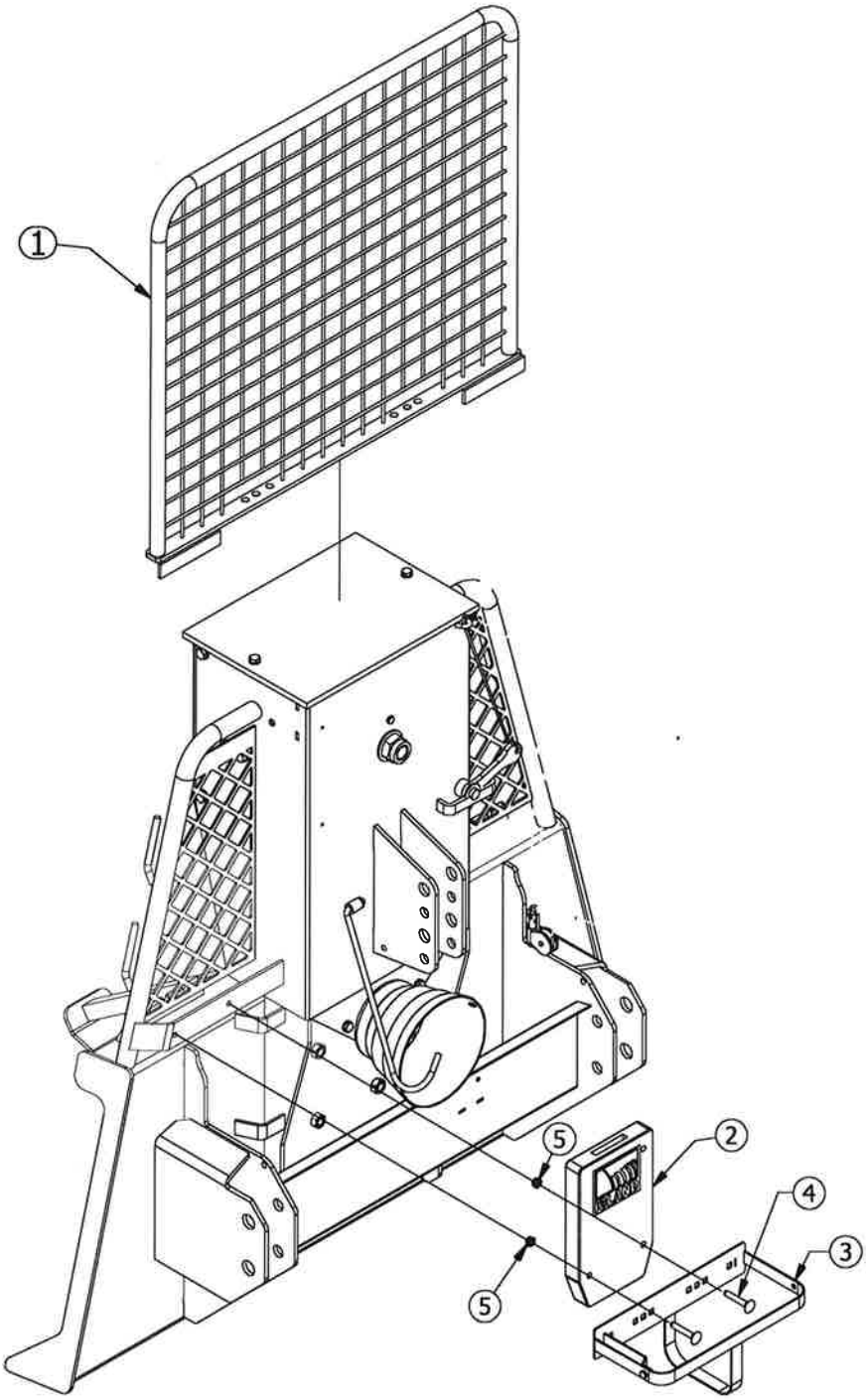

IGLAND 42 S

ELECTROHYDRAULIC LOW PRESSURE CONTROL P/N 095007 "LH"

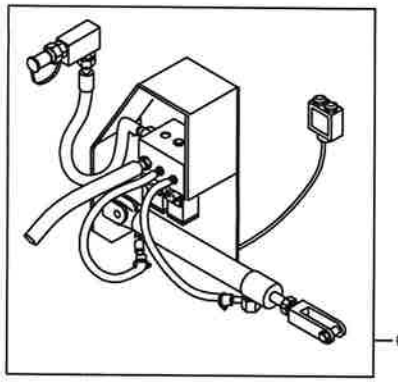

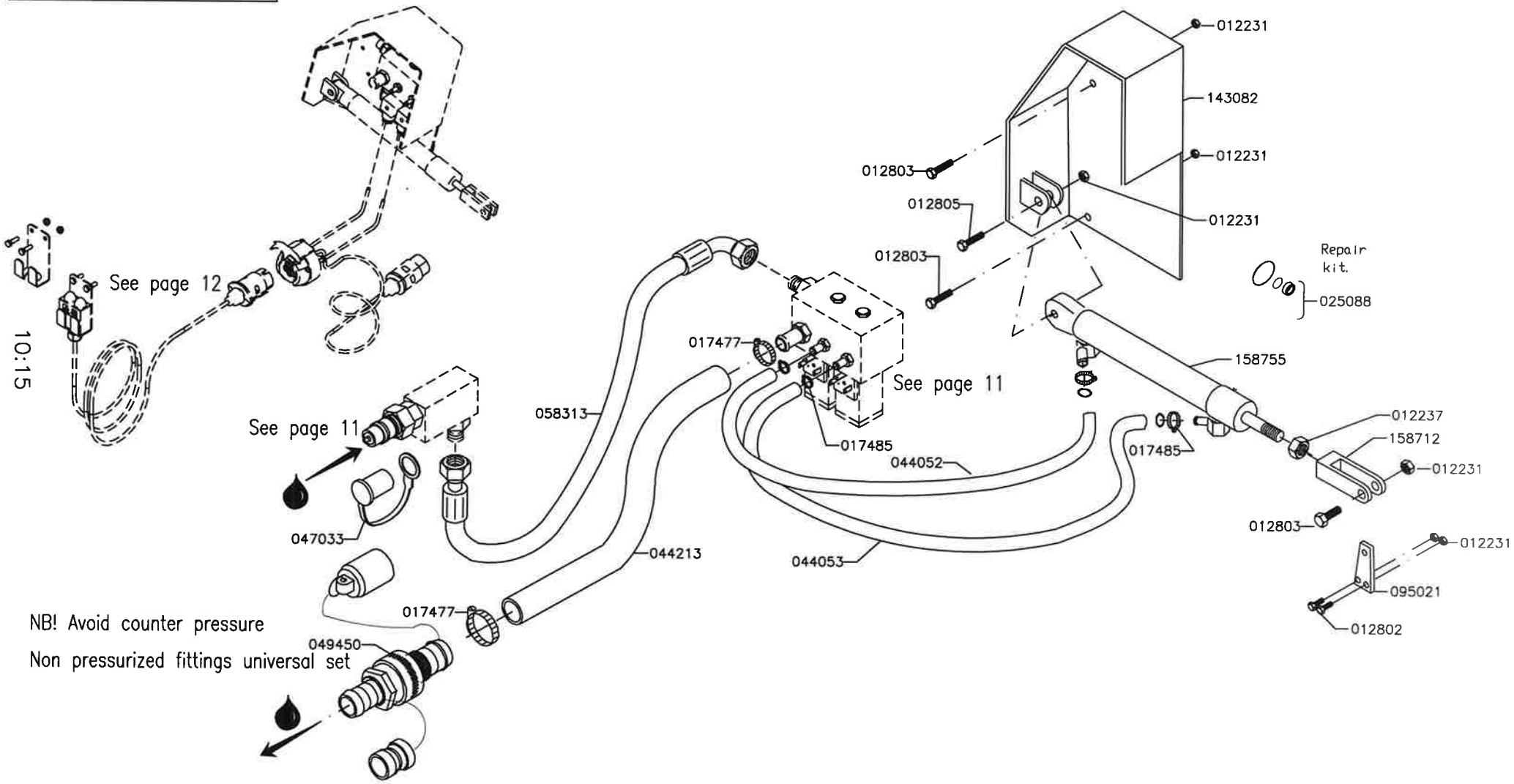

IGLAND 42 S

ELECTROHYDRAULIC LOW PRESSURE CONTROL ("LH")

(Hydraulic components)

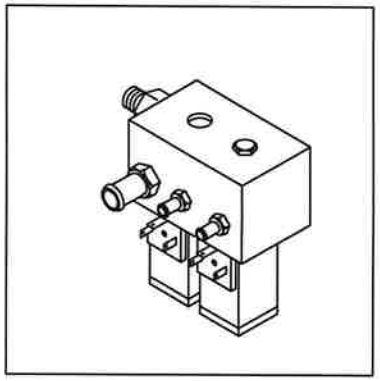

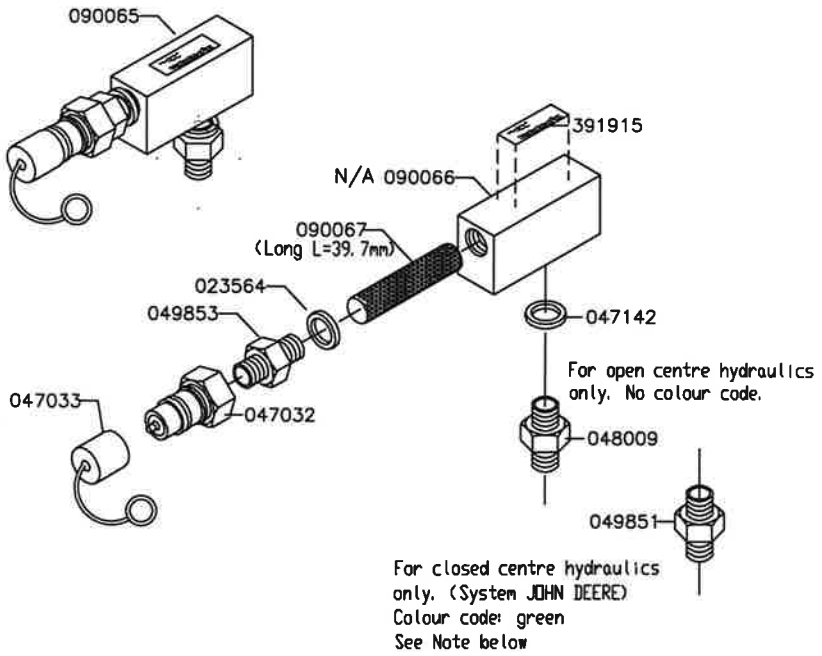

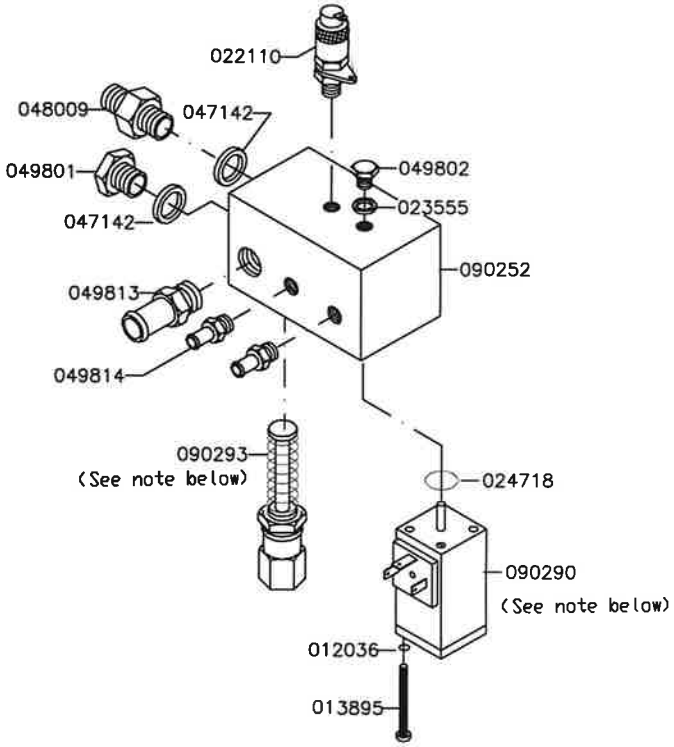

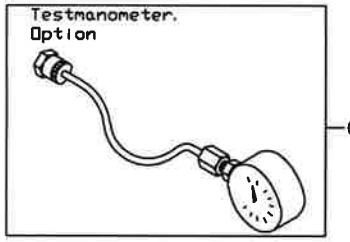

NOTE: Requires special skill on re-installation. If available, see Service Manual.

TILLEGGSUTSTYR - OPTION - ZUBEHÖR

RESERVEDELSLISTE – SPARE PARTS LIST				
Pos.	Qty	Item No./ Varenummer	Beskrivelse	Description
1	1	143084	Kabel, kpl. m/ kontakt og støpsel	Cable, cpl. w/contact
2	1	090854	Betjeningspanel, kpl.	Control box, cpl.
3	1	090844	Holder for betjeningspanel	Holder
4	2	012680	Bolt	Hex-Head Bolt
5	2	012118	Mutter	Hex Nut
6	2	027718	Hette, gummi	Rubber cap
7	3	013916	Skrue	Screw
8	3	012078	Mutter	Hex Nut

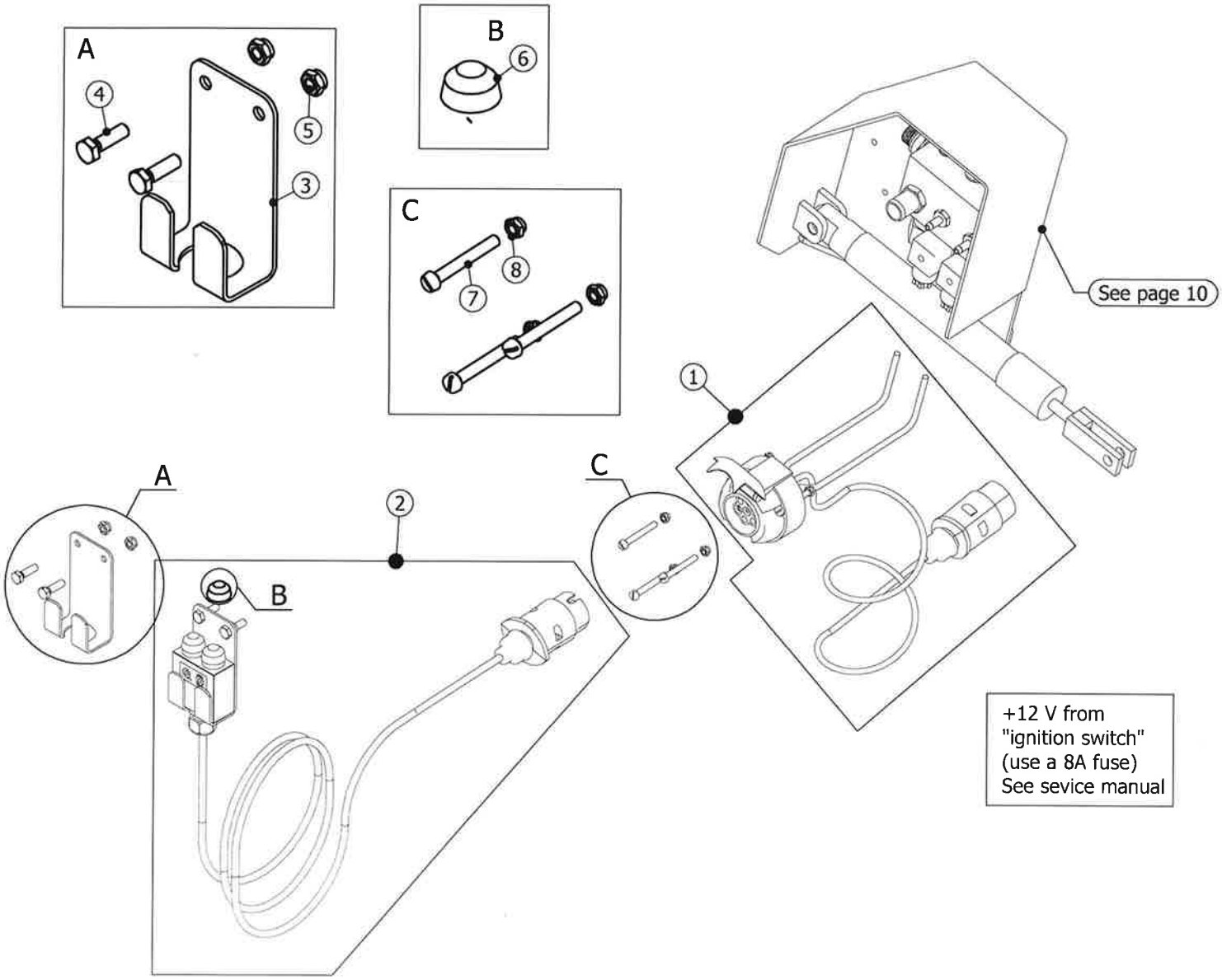

TILLEGGSUTSTYR - OPTION - ZUBEHÖR

RESERVEDELSLISTE – SPARE PARTS LIST				
Pos.	Qty	Item No./ Varenummer	Beskrivelse	Description
-	1	091174	Radio kontrollsett, kpl. Pos 1-7	Radio controlset. cpl. Pos 1-7
1	1	095652	Mottaker 2,4 GHz kpl. m/kabel og kontakter	Reciever 2,4 GHz
2	1	028265	Kabel 4 leder	Cable
3	1	090765	Tilhengerkontakt, 7 pol	Contact, 7 pol
4	1	095622	Radiosender 2,4 GHz	Radio transmitter 2,4 GHz
5	3	095370	Batteri 1,5V AAA	Batteri 1.5V AAA
6	1	391426	Klebemerke	Stickers
7	1	391427	Klebemerke	Stickers

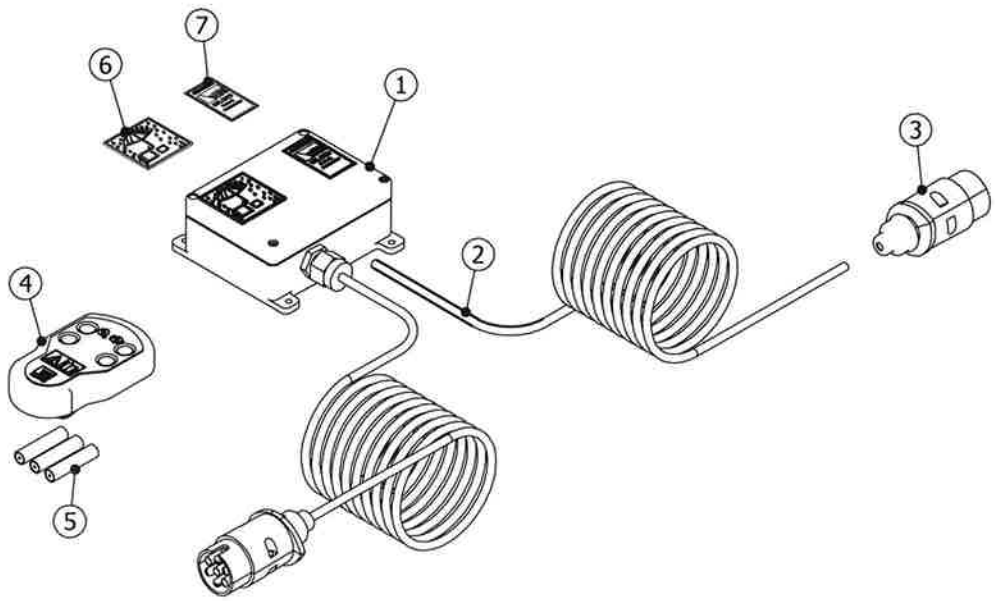

TILLEGGSUTSTYR - OPTION - ZUBEHÖR

RESERVEDELSLISTE - SPARE PARTS LIST - ERSATZTEILLISTE					
Pos	Art.No.	No	Beskrivelse	Description	Bezeichnung
1	091442	1	Turtallsregulering av traktor, kpl.	Speed control for tractor, cpl.	
2	091444	1	Aktuator	Actuator	
3	091421	1	Wire	Wire	
4	022328	1	Wireklemme	Wire clamp	
5	091438	1	Relekopling, kpl.	Relay set, cpl.	
6	091439	2	Rele	Relay	
7	013906	1	Skrue	Screw	
8	012078	1	Mutter	Nut	

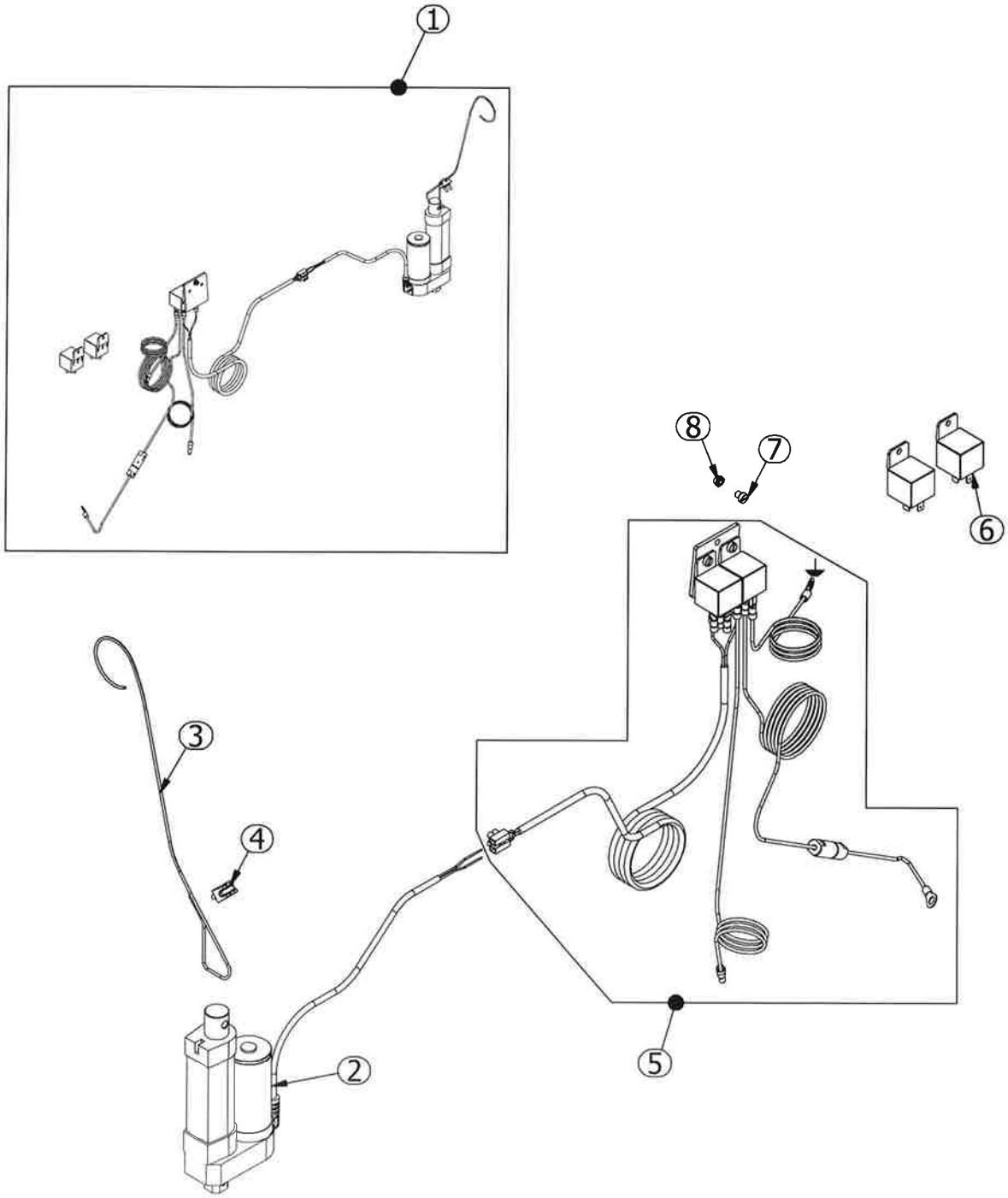

RESERVEDELSLISTE – SPARE PARTS LIST				
Pos.	Qty	Item No./ Varenummer	Beskrivelse	Description
1	1	390977	Klebemerke 42 S	Stickers 42 S
2	1	390815	Klebemerke IGLAND logo	Stickers IGLAND logo
3	1	392006	Klebemerke, CE N/A	Stickers, CE N/A
4	1	391918	Klebemerke, sakte uttrekk	Stickers, slow movment
5	1	391900	Klebemerke, 540 RPM	Sticker 540 RPM
6	1	391420	Klebemerke rotasjonsretning	Sticker
7	1	391415	Klebemerke snorbetjening	Sticker